Secondary Structure: transfer RNA

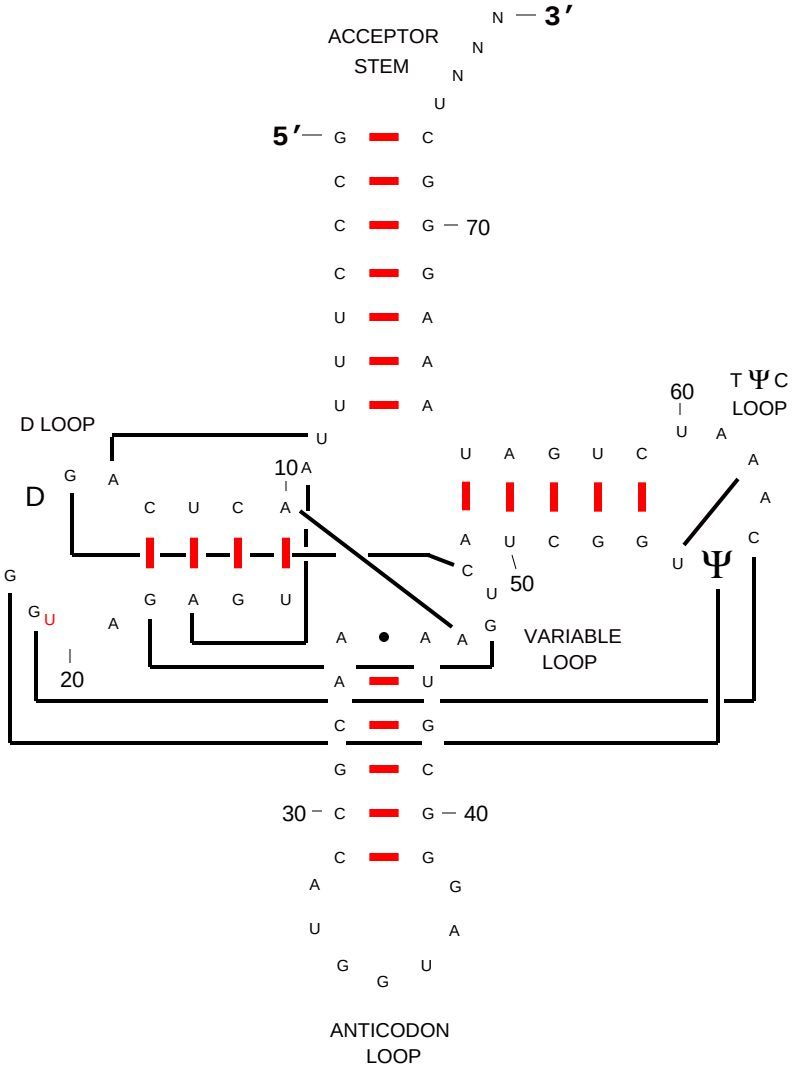

Marchantia polymorpha
(X04465)
1.cellular organisms 2.Eukaryota 3.Viridiplantae
4.Streptophyta 5.Charophyta/Embryophyta group
6.Embryophyta 7.Tracheophyta 8.Euphyllophyta
9.Spermatophyta 10.Magnoliophyta 11.eudicotyledons
12.core eudicots 13.Asteridae 14.euasterids II
15.Asterales 16.Asteraceae 17.Asteroideae
Jun,2002

Citation and related information available at http://www.rna.icmb.utexas.edu