Structure: transfer RNA

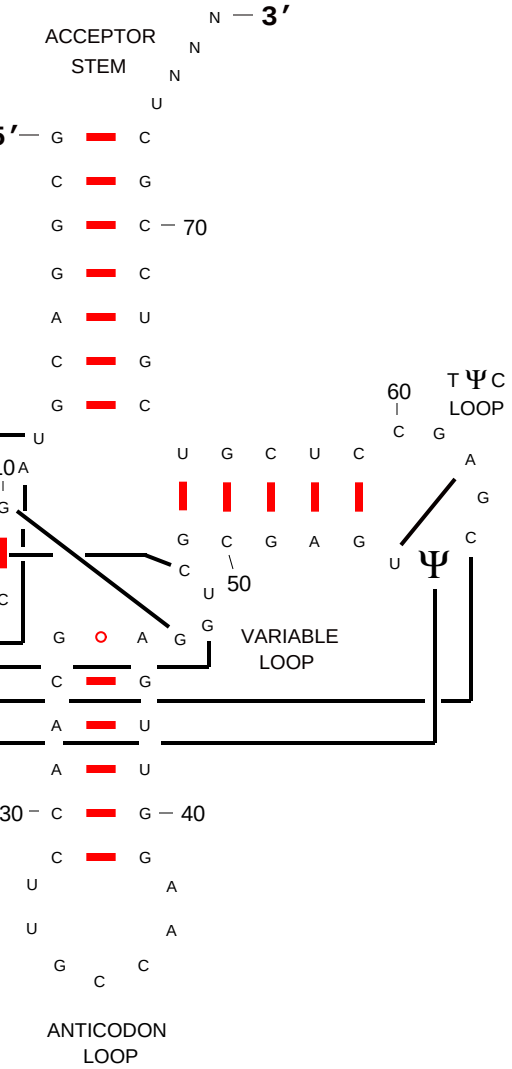

omyces coelicolor A3(2)

53)

organisms 2.Bacteria 3.Firmicutes

acteria 5.Actinobacteridae 6.Actinomycetales 7.Streptomycineae8.Streptomycetaceae 9.Streptomyces 10.S

ation available at http://www.rna.icmb.utexas.edu