Secondary Structure: transfer RNA

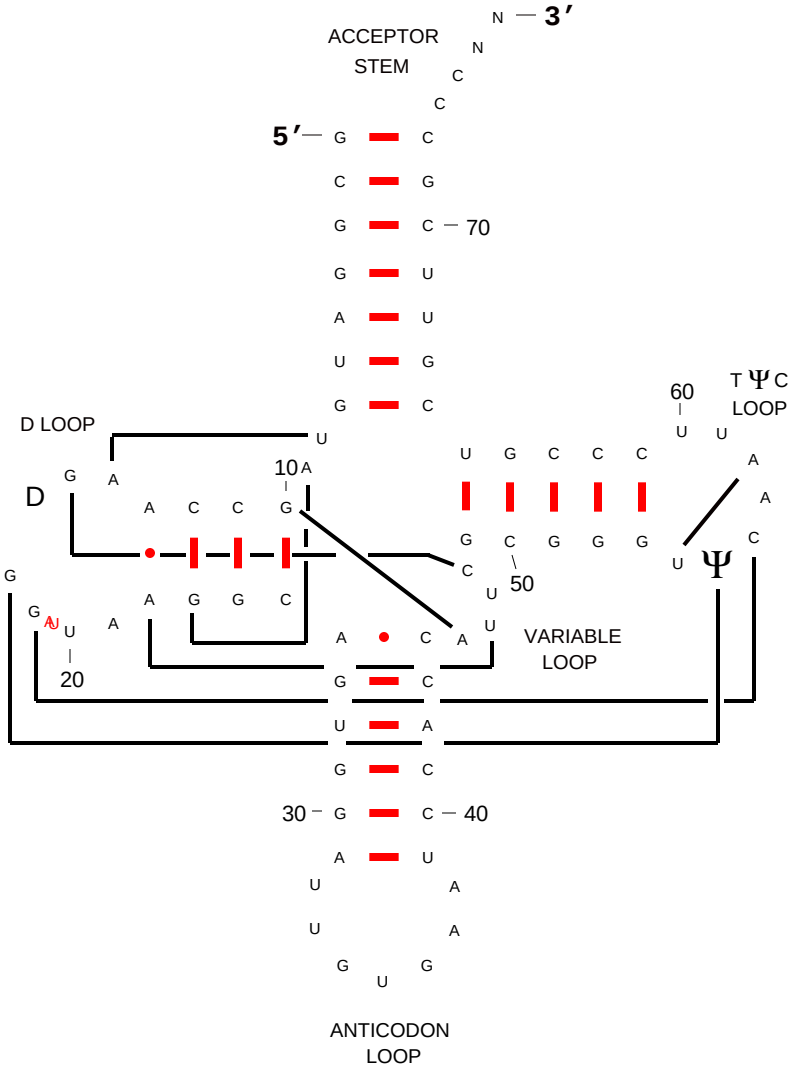

Spinacia oleracea

(AJ400848)

1.cellular organisms 2.Eukaryota 3.Viridiplantae
4.Streptophyta 5.Charophyta/Embryophyta group
6.Embryophyta 7.Tracheophyta 8.Euphyllophyta
9.Spermatophyta 10.Magnoliophyta 11.eudicotyledons
12.core eudicots 13.Caryophyllidae 14.Caryophyllales
15.Chenopodiaceae 16.Spinacia

Jun,2002

Citation and related information available at http://www.rna.icmb.utexas.edu